FUEL FILTER ASSY (HILUX/1KD-FTV, 2KD-FTV (TSAM MADE FOR SOUTH AFRICA))

1116Q-08

REPLACEMENT

HINT:

When replacing the filter, use TOYOTA genuine parts or equivalent parts.

1. DISCONNECT CABLE FROM NEGATIVE BATTERY TERMINAL

CAUTION:

Wait at least 90 seconds after disconnecting the cable from the negative (-) battery terminal to prevent airbag and seat belt pretensioner activation.

2. LOOSEN FUEL TANK CAP ASSY

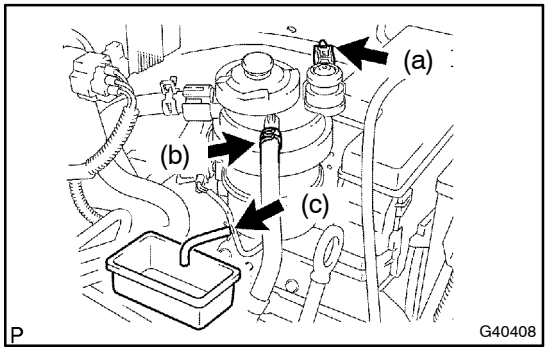

3. REMOVE FUEL FILTER ELEMENT

HINT:

Replacement of the fuel filter element can be performed with the fuel filter assy installed to the bracket.

(a) Disconnect the warning switch connector.

(b) Move the clip to disconnect the hose connected to the filter outlet side.

(c) Connect a hose to the drain cock. Place the other side of the same hose into a container.

(d) Loosen the drain cock to drain fuel (approximately 50 cc (3.0 cu in.)).

(e) Tighten the drain cock.

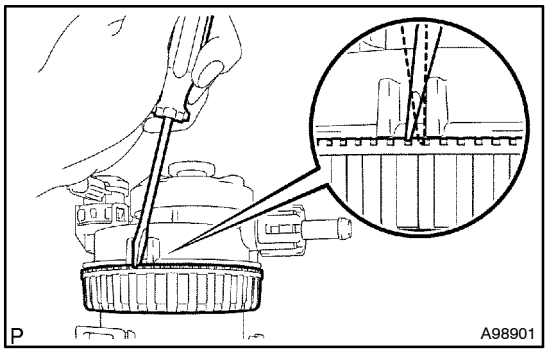

(f) Using a screwdriver as a lever, loosen the fastener nut until it can be loosened by hand.

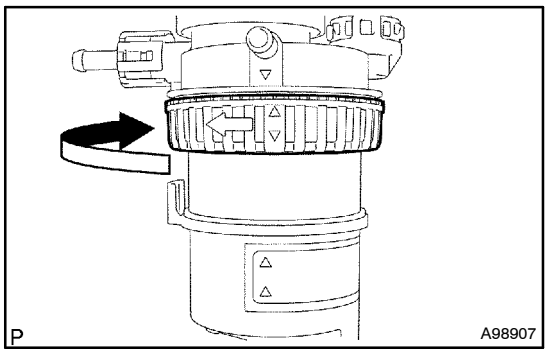

(g) Fully loosen the fastener nut by hand.